# Model A Ford Ignition System Basics

## How It Works and What to Check When It Doesn't

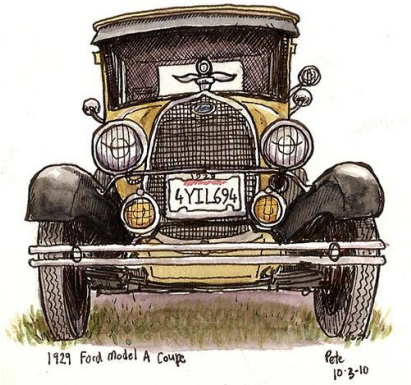


MAFAC Beaver Chapter Technical Seminar

Part One

# Two Part Seminar

- Part One – General Discussion
  - Component descriptions and function
  - Why some configurations work better than others
  - Troubleshooting
- Part Two - Live Demonstrations
  - Condenser measurement
  - Low voltage measurement
  - High voltage measurement

# Car to Car Variations

We all understand that after 86-90 years of operation there will likely be several differences between our cars. Many times those differences can be functionally equivalent, and have no safety or performance impact. Other differences, like the installation of fuses, or additional electrical components can have a big impact.

There are over 10 Million likely combinations of parts between the battery and the spark plugs for a Model A with a 6 volt system. This number grows to over 400 Million using the judging standards as a reference for original component variations.

The result is that what works well for one car might not be a workable solution for another.

# Practical Example

Take for instance the club member who is having trouble with his engine cutting out during drives. He checked all of the regular suspects and now thinks it has something to do with the spark plug connectors not making a reliable electrical connection with the distributor body. Having not experienced this yourself you might assume that the suggested cause is a bit farfetched.

As it turns out his problem could be quite real if he is using short (TT10 or 3076) spark plugs with short bronze spark plug connectors.

# 90% of Carburetor Problems Are Electrical – Art Pugsley

This is good advise, but sometimes the problem is fuel. Fuel is easy to check before trouble shooting the ignition system:

1. Are you out of gas?
2. Is the fuel valve open?
3. Loosen the gas cap and listen for a hissing noise. Vent holes in caps can become blocked creating a vacuum.
4. Is fuel getting to the carburetor?
5. Is the blockage in the carburetor float or screen?
6. Is the blockage at the sediment bowl?
7. Is the blockage in the tank screen?

If the fuel supply is available, and adequate, move on to ignition circuit components.

# Model A Electrical Circuits

1. Starting Circuit
2. Charging Circuit
3. Lighting Circuit
4. Horn Circuit
5. Ignition Circuit

# General Electrical Comments

**<u>There is a good chance that your car is in some way non-standard</u>**

- Shop manuals, internet references, and this presentation, refer to original equipment configuration, wire colors and voltages.
- The Model A Ford uses a 6 volt, positive ground, electrical system.
  - Yellow wires are generally battery supply or charging.
  - Red wires are generally grounded.
  - Green wires are brake lights.
  - Black wires are generally a power source.
- The positive battery cable is (grounded) bolted to the cross member.
- All circuits must electrically connect to the battery ground point on the cross member
- The grounding path for the primary ignition circuit – coil, ignition switch, armor cable, lower distributor plate, plate connecting wire, points, upper distributor plate, distributor housing, engine, rear motor mounts, frame, and finally the positive post of the battery. Quite the trip.
- Model A ground faults are common

# Ignition Circuit Components

1. Battery
2. Fuse / Battery cutout
3. Amp meter
4. Coil
5. Ignition switch
6. Distributor
7. Spark plug connectors
8. Spark plugs

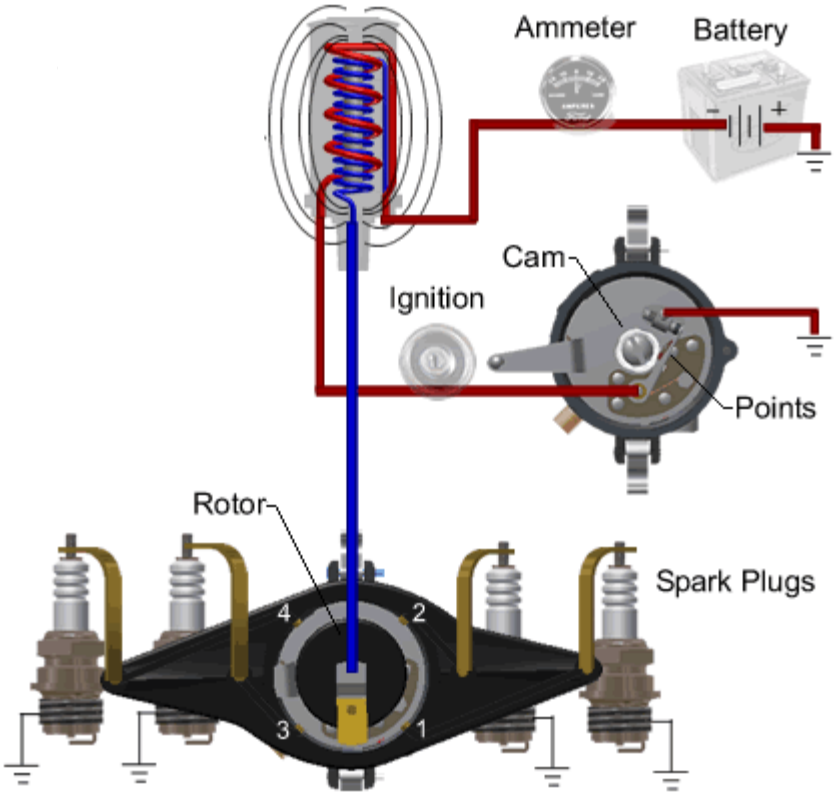

# 6 Volt Battery

- Model A's use a positive ground system. A good ground is required to supply full voltage.
- Battery voltage should be measured at rest.
- For longer battery life, batteries should remain in the green zone (40% or more). Generally speaking, the less you discharge the battery before recharge, the longer the battery will last.
- Battery terminals and cables should be kept clean of corrosion.
- Non-sealed batteries should be filled with distilled water.
- Battery voltage drops during a load, and running the starter motor counts as a load. This translates to a lower voltage to the coil.
- The starter motor is grounded through the engine to the frame. If this is not a good ground, the additional resistance will result in a lower voltage to the starter.

| charge | 6-V battery |
|---|---|
| 100% | 6.37 |
| 90% | 6.31 |
| 80% | 6.25 |
| 70% | 6.19 |
| 60% | 6.12 |
| 50% | 6.05 |
| 40% | 5.98 |
| 30% | 5.91 |
| 20% | 5.83 |
| 10% | 5.75 |

# Fuses and Battery Cutout

Automotive electrical systems were widely used during the time of the Model A's production. Like many things, Henry had his own ideas about electrical standards and practices.

- No fuses – most Model A's today have at least a single fuse located on the starter motor. Another owner option is to install a fuse block on the passenger, or engine side, of the firewall. Remember, the starter motor will still run with a blown fuse, but the engine will not start.
- Electrical components are hot all the time – the coil, the horn, the lights, and brake switch. The Model A electrical system generally interrupts the ground not the power source. There is some anti-theft logic to this, but some fire risk as well.
- Always disconnect the battery before working on the electrical system. A battery cutout switch provides a fast, safe, method of disconnecting battery power from the car. All electrical systems are disabled if this switch is off.

**All Model A's Should Carry An Accessible Fire Extinguisher**

Note: Short drive to a friends house, fuel tank full, and battery cut out left on. This car had no known fuel leaks or electrical issues. It had an alternator, 12 volt inverter with accessory outlets, and turn signals. These last two items would result in a good bit of non-standard wiring inside the firewall on the drivers side.

Note: The sediment bowl and fuel line are burned away. The engine is in tact and does not seem to be the source of the fire.

Note: The firewall got hot enough to melt/burn the terminal box and distributor body.  The paint shows scorching, but no sign of fire.

Note: No fuse on starter.  Uncertain how fuse in passenger compartment was wired.

# Ampere Meter

- Simple method to measure current flow to and from the battery
- Ford script / non-script
- 20 amperes / 30 amperes
- Amp meter wires should be installed using insulated meter nuts.
- The meter is connected with two yellow wires, one to each side of firewall terminal block.
- Left side of meter scale indicates battery discharge.
- Reverse wires to achieve correct polarity.


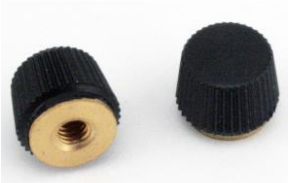


Note: During engine start, the amp meter will indicate a slight discharge as the points close and return to zero as they open. This is good indication that the primary ignition circuit is working correctly.

# Coil

- Coils basically consist of a primary winding, a secondary winding, an iron core and an isolation housing.
- The primary windings is switched on/off by the points.
- The secondary winding is a high voltage circuit suppling power to the spark plugs via the distributor.
- The primary winding is made of thick copper wire with approx. 200 windings. The secondary winding is made of thin copper wire with approx. 20,000 windings.
- The primary coil terminals are marked positive and negative. The negative terminal (black wire) provides power from the amp meter. The positive terminal (red wire) connects to the ignition switch. **<u>Polarity Matters</u>**
- Primary circuit resistance
  - Les Andrews 1.6 – 1.8 Ohms. This equates to 3.7 – 3.3 Amps.
  - Steve Pargeter 1.0 – 3.0 Ohms. This equates to 6 - 2 Amps.
- Secondary circuit resistance 6K – 12 K Ohms

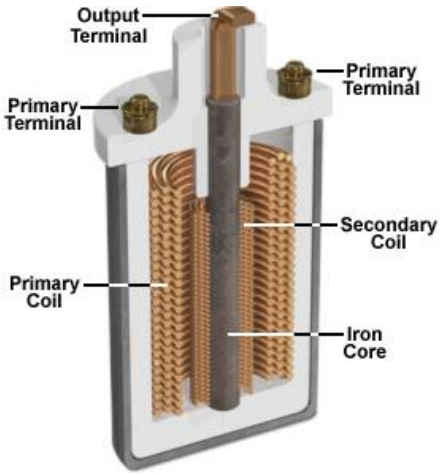


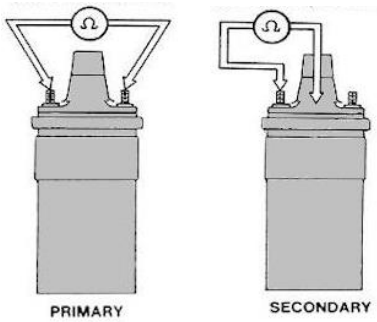

# Electrical Structure of Coil

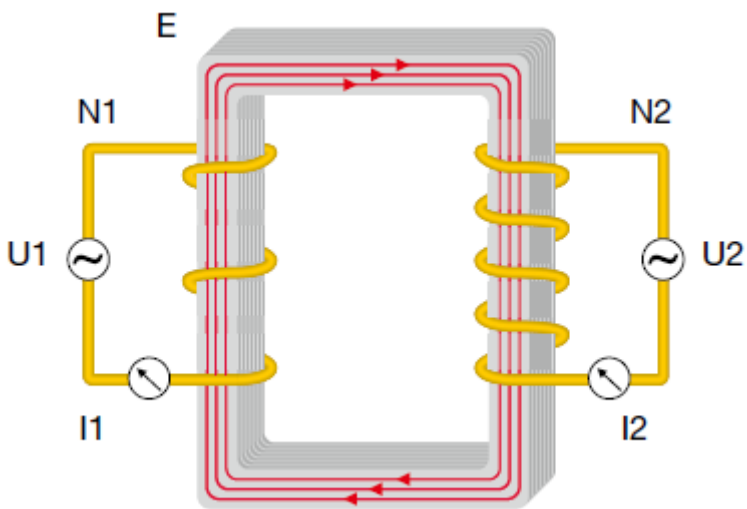


E = Laminated iron core (magnetic)

N1 = Windings primary side 100–250 windings

N2 = Windings secondary side 10,000–20,000 windings

U1 = Primary voltage (battery voltage) 6-6.8 Volts

U2 = Secondary voltage 20,000–25,000 Volts

I1 = Primary current generally 3-5 Amps

I2 = Secondary current 60–80 mA

October 1928 – Ford coils had 250 turns in the primary, and 16,000 turns in the secondary.

# Ignition Switch and Armor Cable

- The ignition switch function is to electrically connect the positive terminal of the coil to the armor cable.
- When the switch is off, there is no electrical ground for the coil primary circuit – and no spark
- The armor cable's function is to provide an electrical connection between the ignition switch and the distributor lower plate.
- Original pop-out switch
- Reproduction Re-pop switch
- Other reproduction switches

Note: Reproduction switches have exposed connections. Care should be taken with these switches to ensure that the gas tank area behind the switch is electrically insulated.

# Distributor

- Distributor housing
- Shaft type
- Shaft bushings
- Lubrication requirements
- Lower plate type
- Upper plate type
- Condenser type
- Cam type
- Rotor
- Distributor cap
- Distributor body

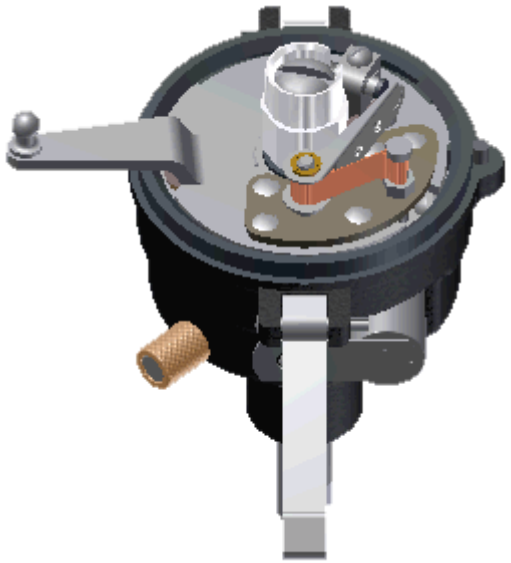

# Distributor Housing Style

- During the production years there were four variations of the housing produced.
- All variations are functionally equal and will perform well in your car.
- The housing should be free of rust and cracks.
- Care should be taken to ensure that the grove holding the upper plate, and the outside of the lower body, are free of grease and paint. Both points can reduce the effectiveness of the electrical ground.

# Distributor Shaft Types

- The distributor shaft is driven by the same gear that drives the oil pump. The distributor, like and engine cam, turn at half the crankshaft RPM.
- Early production distributors used a long shaft with a single drive joint at the drive gear. This arrangement minimized lash, but resulted in excessive bushing wear caused by slight shaft misalignment.
- Later production distributors use two shafts. A short upper shaft, and a lower shaft, sometimes referred to as an intermediate shaft. This arrangement has two drive joints, potentially increasing lash, but reduces bushing wear. This configuration has the additional benefit of easing the removal of the distributor.
- Reproduction upper shafts are available with the shaft drilled to provide oil to the upper bushing. This modification can be made on a standard upper shaft.

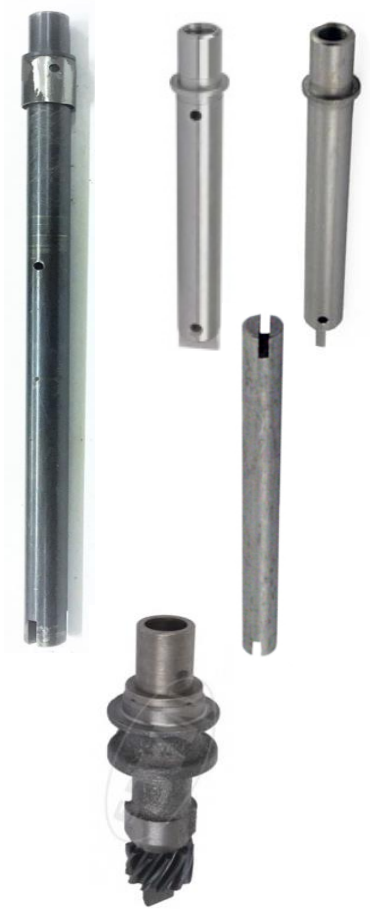

# Distributor Shaft Bushings

- Check the distributor for shaft end play (up and down) and side play. This is different than gear lash. End play should be less than .001” and side play should be less than .003”
- End play indicates that the thrust washers are worn, or missing. This can cause the slots in the ends of the shafts to wear, increasing lash.
- Side play indicates that the bushings, and perhaps, the shaft need to be changed.
- Shaft side play causes the point gap to vary impacting engine performance.
- The shaft should be replaced if the diameter is less than .498” If the shaft is to be replaced consideration should be given to using one drilled to provide an oil reservoir for the upper bushing.
- Brushings should be reamed, or honed, for a free, but not loose fit.

# Distributor Lubrication Requirements

There are three lubrication points in a distributor.

1. Cam – apply a light coating of cam lubricant every 2000 miles. This will reduce to wear on the points fiber block.
2. Upper bushing lubrication requires the removal of the upper plate unless the shaft has been modified.
3. Lower bushing is lubricated via oil fitting on the distributor housing. This should be done every 500 miles.

# Original Distributor Components

- The points on an original top plate are easier to adjust than a modern points upper plate. Points are set at .018 to .022”
- The Model A distributor weak point is the unreliable nature of the wiring between the upper and lower plate.
- Failure of the plate connecting wire results in an open circuit, or a short to ground.
- An open circuit has the same effect as turning off the ignition switch – no spark
- A direct short also results in no spark, but has the added problem of over heating the coil as current is continuously flowing as long as the ignition switch is on.

# Modern Distributor Components

- The points on a modern top plate can be a little more challenging to adjust.
- The sometime troublesome wire link between the upper and lower plate is eliminated.
- The two plates are electrically connected by a friction foot. If not adjusted correctly this foot can result in intermittent connection between the upper and lower plate.
- Failure of the foot generally results in an open circuit.
- An open circuit has the same effect as turning off the ignition switch – no spark
- I have found that I get better results if I remove the distributor from the car and make the point and foot adjustment on the bench. A meter can be used to verify continuous electrical contact across the spark advance range.

# Modern Is Not Always Better

The points and condenser used with the modern top plate were designed and manufactured for something other than a Model A Ford. This configuration moves the condenser inside of the distributor body away from the exhaust manifold. The capacitor will perform well as long as if has the correct value. Unlike original points, modern points rely on the two mounting screws to maintain the correct point gap setting.


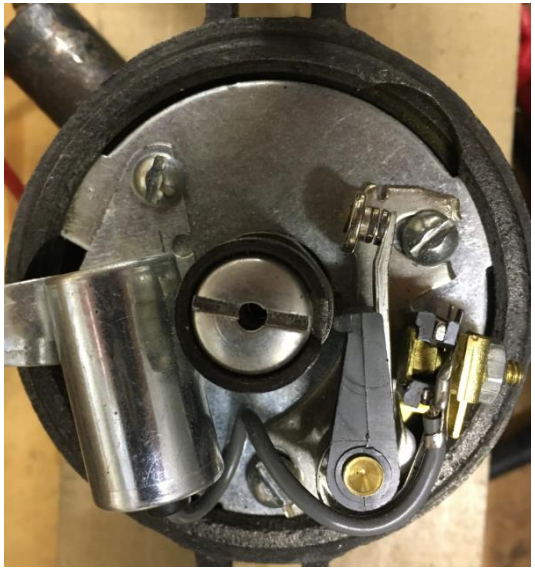

# Condenser

- Original style condensers are subjected to high heat.
- Early condensers used oiled paper as an insulator and suffered high failure rates.
- Currently available condensers use a plastic film for insolation and are very reliable.
- The most likely failure mode is an internal short resulting in loss of spark.
- Good condensers should have a value of about .3 microfarads.

Good Quality

Poor Quality



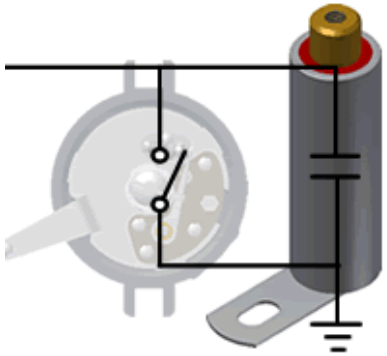

# Distributor Cam Options

- There are four variations of distributor cams in use today - original and reproduction A, and original and reproduction B. Both originals were heat treated and ground to within .0005” tolerance.
- Reproduction cams available today all seem to have an “A” part number, but are advertised as high quality hardened aircraft steel with B grinds.
- The difference between the two is the shape to the lobes. The A lobes are symmetrical providing a dwell of 32-35 degrees. The B lobes are blended on the trailing side resulting in a dwell of 44-50 degrees.
- The extra 10 degrees of dwell means that the points are closed longer allowing the coil additional time to become saturated, delivering a higher voltage discharge.

Note: When you time your car you are really only setting the ignition timing for the #1 cylinder. You are relying on the quality of the timing cam to correctly set the ignition timing for the other three cylinders

# Distributor Cap and Body

- The distributor cap electrically connects the high voltage coil wire to the rotor.
- The rotor connects the cap to the body. The spring top should make good connect with the cap. The rotor should also be free of pitting and maintain a .025” clearance at all four contact points.
- The distributor body connects the rotor and the spark plug connectors.
- Modern distributor caps use modern spark plug wires, but are functionally equivalent to original components. The use of a modern cap and wires will greatly reduce radio interference.
- Both styles of distributor bodies are designed to limit upper plate spark advance. Remember that 20 degrees distributor advance equals 40 degrees of crankshaft advance.

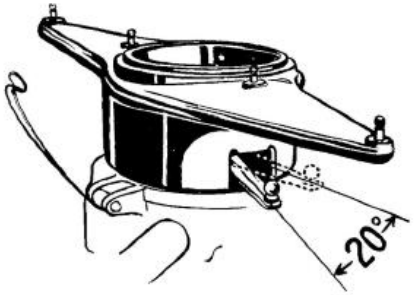

# Spark Plug Connectors

Three available lengths

1. Straight Bronze, 3 1/8”
   1928 – June 1930
2. Offset Bronze, 3 1/4”
   June 1930 - 1931
3. Offset Bronze, 3 13/16”

Note: Desired connector length is dependent on spark plug selection. Short plugs like Motorcraft TT10 may require longer connectors to achieve solid electrical connection

# Spark Plugs

- Match your spark plug heat range to your engine and driving style. The objective is a clean plug with limited carbon build up.
- Higher spark plug heat range – stock head, rich fuel mixture, worn rings, short or low speed drives
- Lower spark plug heat range – higher compression head, correct fuel mixture, low oil consumption, long or high speed drives.
- Center electrode should be filed flat with a points file. Spark gap is 0.032" and 0.035." Gap can be increased slightly to improve smooth idle. Remember the larger the gap, the higher the required voltage to generate a spark.

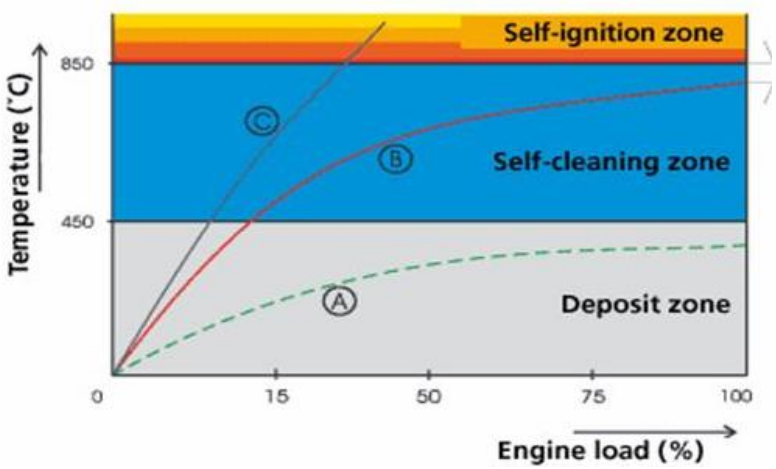


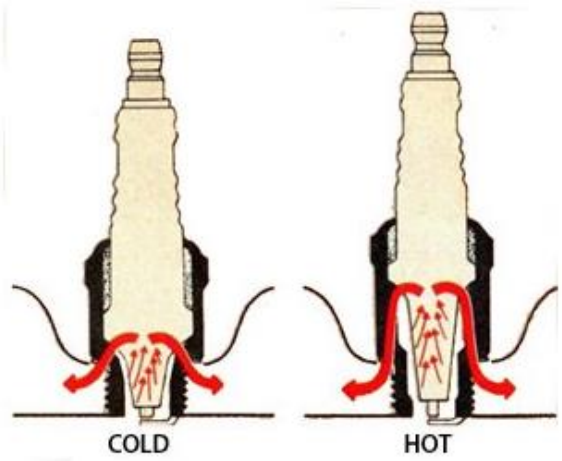

# Popular Spark Plug Brands

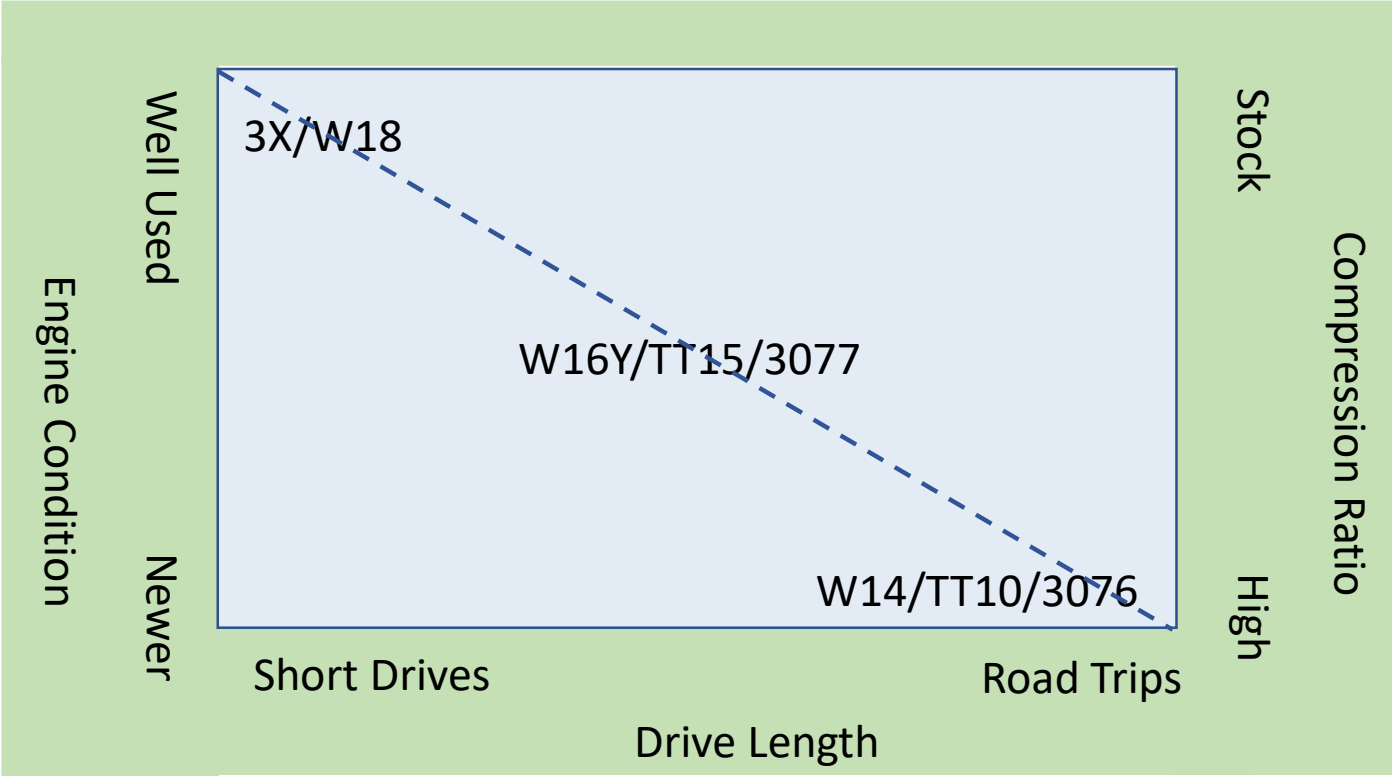


Champion = W14, W16Y, W18, X3
Autolite = 3076, 3077
Motorcraft = TT10, TT15

# Understanding Spark Appearance


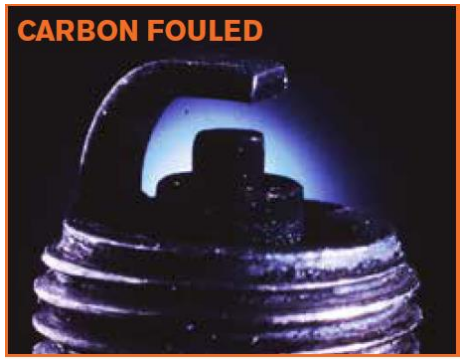



**Normal** – Grayish-tan to white in color. No unusual signs of deterioration or coatings.

**Carbon fouled** – Dried, soft, black, sooty coating. There are a number of possible causes for this condition: Spark plug heat range is too cold; extensive low-speed/short-distance driving; weak ignition system; rich fuel mixture; vacuum leaks; valve problems.

**Fuel fouled** – Firing tip may be damp with gasoline, and usually the odor of gasoline is present on the spark plug. The insulator is often tinted the color of charcoal. This indicates that gasoline is not being burned properly in this cylinder. Check for faulty or sticking choke, overly rich fuel mixture, ignition problems, or a spark plug heat range that is too cold.

# Options For Finding Top Dead Center

1. Model A timing pin – intended to detect timing dimple in camshaft drive gear.
2. Timing pin tool - handy spring loaded tool puts pressure on the timing pin so your hands are free to manually rotate the engine for timing purposes.
3. Model A Timing Kit / Degree Indicator - This kit allows you to use a timing light. Also comes with gauge that lays on distributor body so you can see how many degrees you are moving cam.
4. Timing Indicator Tool - remove timing pin and thread this tool in until the key ring on the end starts to loosen.
5. Timing Aid – used with a light or meter to find timing dimple - hands free

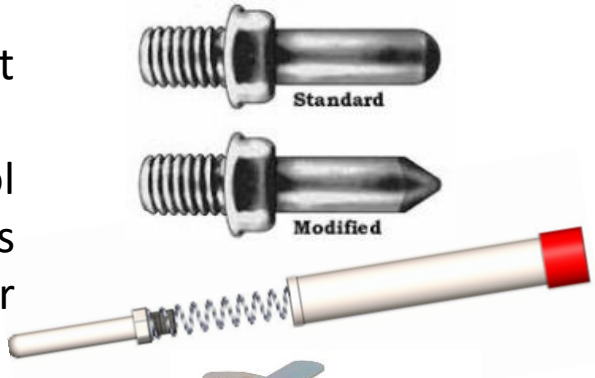


1

2


3

4

5

# Basic Timing Steps

1. Check that spark advance lever achieves full travel with distributor body slot.
2. Set spark advance lever to zero – full up
3. Remove distributor cap body
4. Rotate engine, or cam, to position points full open. Clean points as required with a points file, and confirm point gap of 0.018-0.022 inches.
5. Locate top dead center of #1 piston – method of your choice
6. Loosen machine screw on top of distributor shaft
7. Rotate cam until points just open at the #1 cylinder rotor location.
8. Tighten cam machine screw to ensure cam stays in desired location
9. Reassemble distributor body and cap. Check work area for tools and reinstall cam gear (if used) pin.
10. Start engine.

Comprehensive Les Andrews timing videos:

https://www.youtube.com/watch?v=3Xc7r0djEKo

https://www.youtube.com/watch?v=zju4nagtiCU

# Using Mechanical Spark Advance

- Full retard to start – this is to aid in crank starting, and to reduce the likelihood of a back fire damaging the starter drive or shaft.
- The mast jacket has eleven detents for spark advance. This equates to about 4 degrees of spark advance per detent.
- After engine start the spark should be advanced about four detents.
- When driving think one detent of advance for every 5 MPH in third gear. So 30-35 MPH would be 6-7 detents, or about 2/3 down.
- Test this when at your desired driving speed by slowly reducing the advance until you feel a loss of power, then advance one detent past when you feel the power return.

# Meters Options

- Fluke 117 - $147.00
  - Voltage
  - Resistance
  - Amperage
  - Capacitance
- Auto Multimeter MST2800B - $25.73
  - Voltage
  - Resistance
  - Amperage
  - Capacitance
  - Dwell
  - Tachometer
  - Temperature
- Honeytek A6013L - $15.98
  - Capacitance only
- Harbor Freight - $5.99 or free
  - Voltage
  - Resistance
  - Limited amperage




# Voltage Tester Options

- Deluxe test probe - $10
  - 6, 12 volt detection
- Standard test probe - $4
  - 6, 12 volt detection
- Home made light - $3
  - 6, 12 volt (bulb dependent) detection
- Not overly bright friend - $0
  - Need to tell him to touch an electrical part, but no to worry because the key is off.  Good for any voltage.

# Modern High Voltage Tester Options

- Spark tester – measures the spark plug firing voltage - $20
- Coil polarity tester – checks polarity of primary coil circuit - $25
- Ignition spark tester - measures the spark plug firing voltage - $8
- Ignition spark tester – displays that high voltage is present - $3


# Less-Modern High Voltage Tester Options

- Sears Model 244.2186 high voltage meter - measures the spark plug firing voltage - $20
- Snap-on MT2700 – checks polarity and voltage of secondary coil circuit - $35


# Troubleshooting

- Sight, sound, and smell are your primary initial tools.
- Many problems can be traced to loose wires and components.
- Sounds and smells that occurred coincident with the problem can be used to help determine its cause.
  - i.e. back fire, high speed misfire, sudden loss of power, smell of gas
- Visual inspection can rapidly result in corrective action.
- Fuel
  - None – out of gas, blocked fuel filter, float valve
  - Too little – GAV too lean, fuel filter, float level
  - Too much – stuck choke, GAV too rich, defective float valve
- Spark
  - None – failed condenser, armor cable shorted in distributor, broken wire between distributor plates
  - Too little – point gap
  - Wrong time – poor timing, loose distributor cam

# Troubleshoot Primary Circuit

1. Voltage at the starter motor – battery good
2. Fuse condition – if installed
3. Voltage at left (driver side) terminal post – fuse good
4. Voltage at right (passenger side) terminal post – amp meter good
5. Voltage at black wire on coil – wire good
6. Voltage at red wire on coil – primary coil winding good
7. Turn on ignition switch and remove distributor cap and body.
8. Hold points open
9. Voltage at movable points arm – ignition switch, armor cable connection, lower plate wire are good

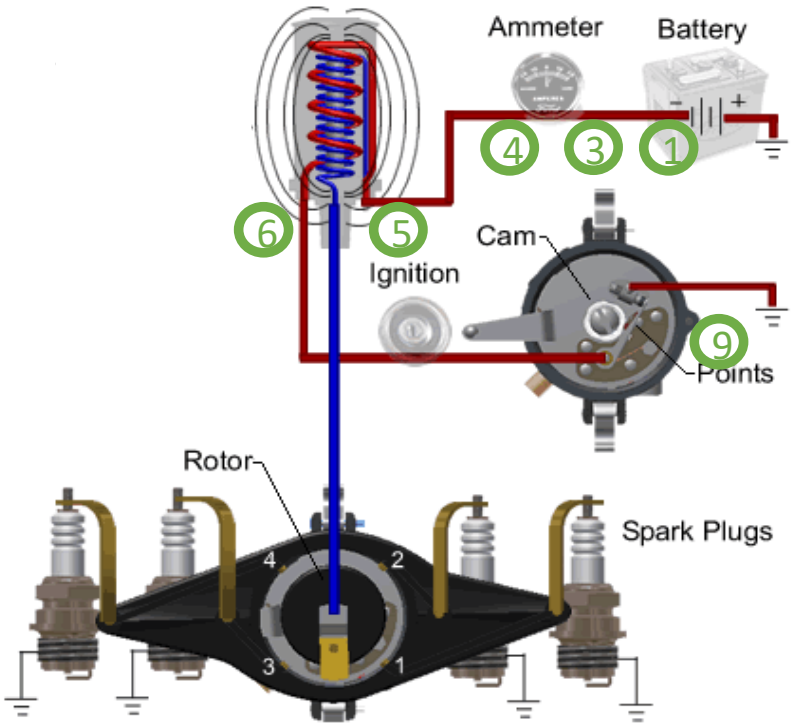

# Troubleshoot Secondary Circuit

1. Points and primary circuit are normal
2. Coil should be warm to the touch
3. Coil wire – copper tips in place and firmly seated
4. Distributor cap – not cracked and no sign of carbon trail. Black tip on underside in place,
5. Distributor rotor – tip not burned or pitted. Upper spring contacting the cap.
6. Distributor body – not cracked and no sign of carbon trails.
7. Spark plug connectors – ensure solid connection with distributor body posts.
8. Spark plugs – should have all four

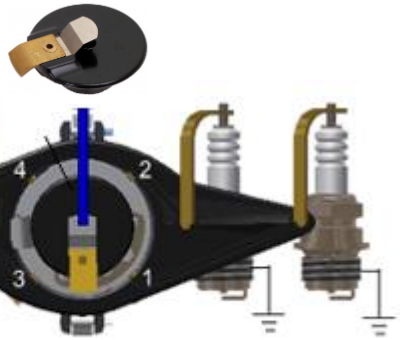

# Parts Recommendation

The Model A is a pretty simple, reliable, machine. Like all machines it requires preventive maintenance, and from time to time repair. Many of us carry spare parts and tools. What parts you carry should be limited to what you are comfortable replacing, along with the tools required to complete the job. It is easier to build, test, and time, a distributor in your garage than it is on the side the road.

You are unlikely to need a hub puller and axel shims. You might however have need of a meter, some fuses, a distributor, some oil, and the hand tools needed for the task. The most important tool I carry is my extended towing AAA card.

# Roadside Seminars

Maintenance of the Model A is largely a common sense process. Usually a systematic review of the fault leads to a successful outcome. Generally the problems are minor: loose wire, point gap, or obstructed fuel supply.

There will be times when internal failures make roadside repair unlikely, but generally repairs are pretty straight forward. The engine needs three things to run: fuel, air, and spark.

1. Fuel – pull the choke and crank the engine. After four or five revelations you are likely to see fuel coming out of the carburetor intake. You have fuel.
2. Air – if the distributor shaft is turning, so is the cam shaft and the valves are opening and closing. If you doubt the timing of those opening and closing, remove a spark plug and cover the hole with your finger and feel for compression as someone cranks the engine. You have air.
3. Spark – observe the amp meter to confirm that the primary ignition circuit is working. Find a not so bright friend to touch a spark plug while you crank the engine with the ignition switch on. Based on the reaction of your friend – you have spark.

# Credits and References

- Model A Basics - http://modelabasics.com/Ignition.htm
- Model A Ignition Primer & Restoration Guidelines – Steve Pargeter
- Snyder's web site – component pictures
- Mac's web site – component pictures
- Dykes Automotive and Gasoline Engine Encyclopedia
- Timing a Model A - Les Andrews YouTube videos
- Model A Ford Mechanics Handbook – Les Andrews
- Ford Garage web site - http://www.fordgarage.com/